MODEL T10A - PMB

DIRECT COUPLED

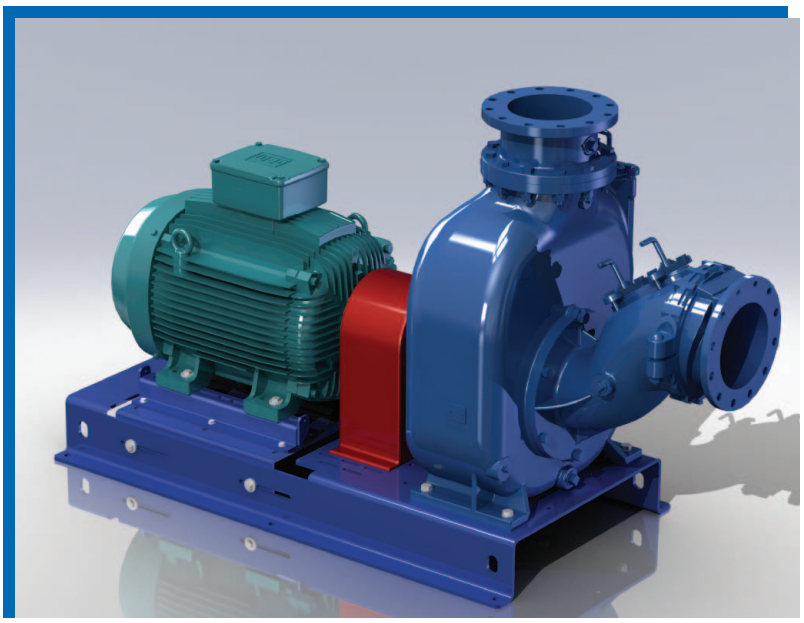

MODEL T10A - PMB

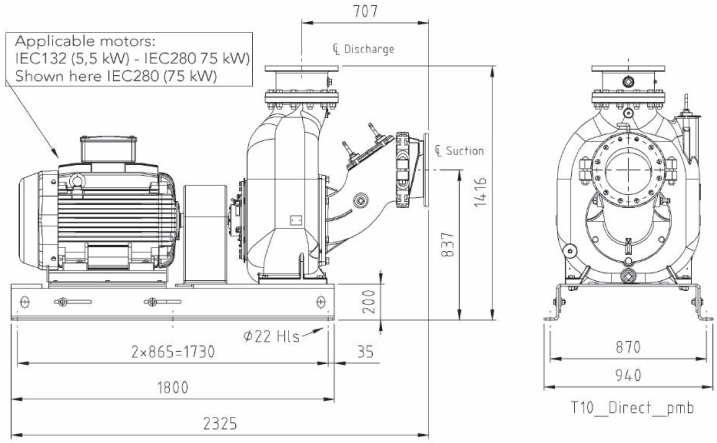

Optional Equipment: Self Cleaning Wear-plate, Pump Drain Kit, High Pump Temperature Shutdown Kit, 240V Casing Heater, Suction and Discharge Gauge Kit, Automatic Air Release Valve.

PUMP SPECIFICATIONS

Size: 250 mm x 250 mm DIN 2527 (PN16) Flanged.

Casing: Gray Iron 30. Maximum Operating Pressure 6,83 Bar.*

Semi-Open Type, Two Vane Impeller: Ductile Iron 65-45-12. Handles 76,2 mm Diameter Spherical Solids.

Impeller Shaft: Stainless Steel 17-4 PH.

Shaft Sleeve: Alloy Steel 4130.

Seal: Cartridge Type, Mechanical, Oil-Lubricated, Double Floating, Self-Aligning. Tungsten Titanium Carbide or Silicon Carbide Rotating and Stationary Faces**. Stainless Steel 316 Stationary Seat. Fluoro-carbon Elastomers (DuPont Viton® or Equivalent). Stainless Steel 18-8 Cage and Spring. Maximum Temperature of Liquid Pumped, 71°C.*

Replaceable Front Wear Plate: Ductile Iron 80-55-06.

Replaceable Rear Wear Plate: Carbon Steel 1026.

Removable Clean-out Cover Plate: Gray Iron 30; 4 kg.

Flap Valve: Neoprene w/Steel Reinforcing.

Seal Plate: Gray Iron 30.

Bearing Housing: Gray Iron 30.

Radial and Thrust Bearings: Open Double Row Ball.

Bearing and Seal Cavity Lubrication: SAE 30 Non-Detergent Oil.

Suction Flange: Gray Iron 30.

Suction Head: Gray Iron 30.

Gaskets: Buna-N, PTFE, Cork, and Rubber.

O-Rings: Buna-N.

Hardware: Standard Plated Steel. Brass Pressure Relief Valve. Bearing and Seal Cavity Oil Level Sight Gauges.

Models available in different materials: T10A3S-B /FM, T10A60S-B /FM, T10A61S-B /FM, T10A71S-B / FM and T10A65S-B /FM***

* Consult Gorman-Rupp Europe for applications exceeding maximum pressure and/or temperature indicated.

** See Pump Specification data sheet for the specific seal face material of construction.

*** Refer to The Gorman-Rupp Specification sheet for details on the available pumps. Premium materials subject to a price adder.

Specifications and illustrations are subject to change without notice / © Copyright by Gorman-Rupp Europe 2015.

GORMAN-RUPP EUROPE
gresales@gormanruppeurope.com

PERFORMANCE CURVE

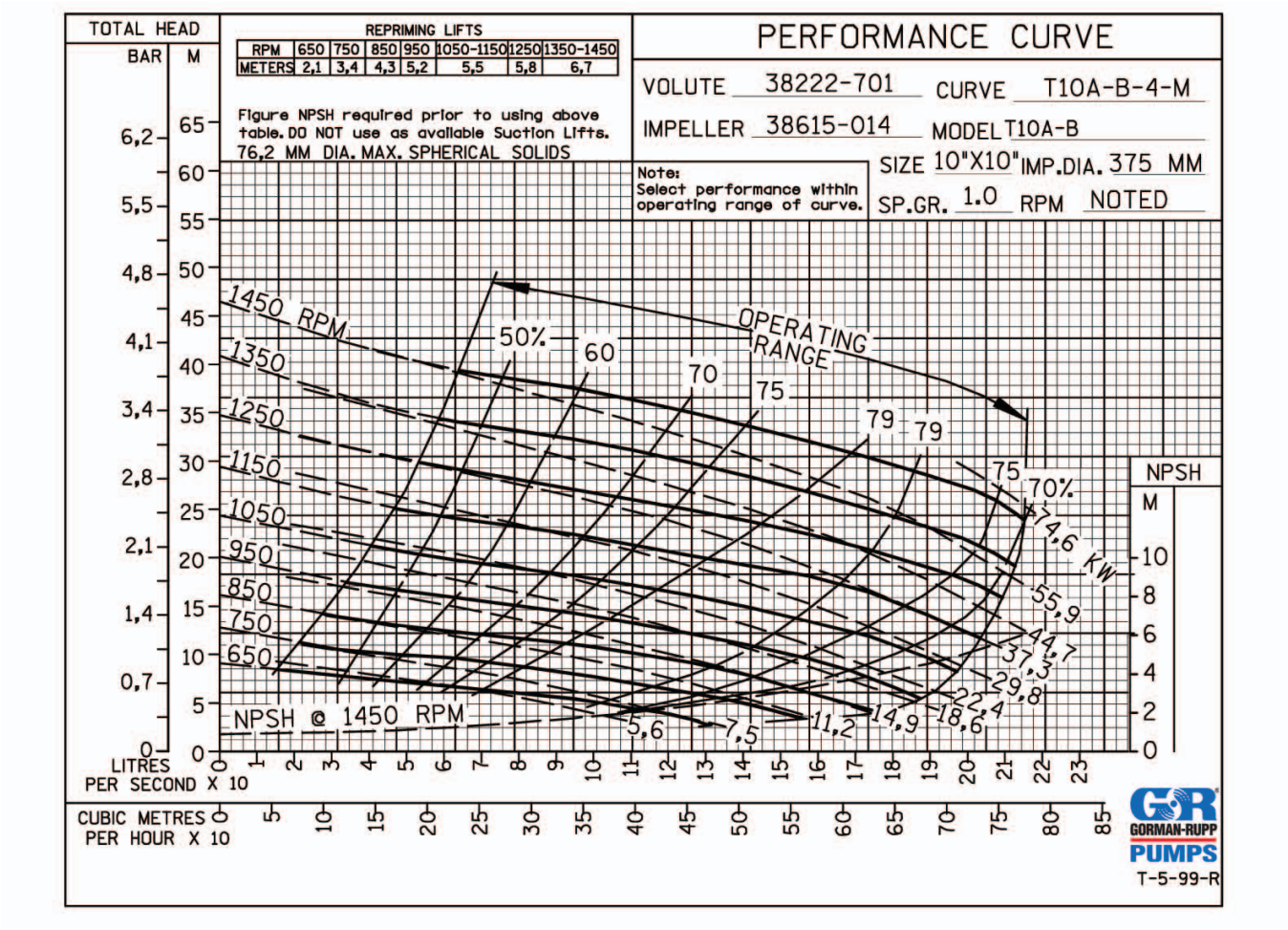

MOTOR DIMENSIONS

W22 - PREMIUM EFFICIENCY			
pole	IV	1500rpm	50Hz
voltage	380V	400V	415V

output (kw)	dimensions w x l x h (mm)	weight (kg)	frame
75	599 x 1071 x 752	729	280S/M
55	486 x 965 x 655	507	250S/M
45	455 x 886 x 609	420	225S/M
37	455 x 886 x 609	392	225S/M
30	402 x 767 x 517	243	200L
22	360 x 702 x540	198	180L
18,5	360 x 664 x 540	180	180M
15	329 x 642 x 424	145	160L
11	329 x 598 x 424	109	160M
7,5	271 x 490 x 350	78	132M
5,5	271 x 452 x 350	69	132S

UPDATED PMB FRAME

Steel: S235JRG2, powder coated finish.
Zinc plated hardware + nuts.

MOTOR SPECIFICATIONS

Standard Features

- Three-phase, multivoltage, IP55, TEFC;
- Premium efficiency - complying with IE3 efficiency levels according to IEC60034-30;
- Number of Poles: 4*
- Mounting: B3T;
- Voltage: 220-240/380-415V / 380-415/660V;
- Class "F" insulation (ΔT=80K);
- Continuous duty: S1;
- Design N;
- WISE® (WEG Insulation System Evolution) insulation system - Suitable for inverter duty applications*;
- Ambient temperature: 40°C, at 1000 m.a.s.l.;
- Squirrel cage rotor / Aluminium die cast;
- V'Ring seal for frames 63 to 200L and for frames 225S/M to 355A/B;
- Stainless steel nameplate AISI 316;
- Metric threaded cable entries on the terminal box;
- Color: RAL 6002 - Green.

*For additional details about Inverter operation, please contact our technical support.

*Special Insulation for voltage above 575V

Optional Available

- Degree of Protection: IP56, IP65, IP66, IPW56, IPW65 or IPW66

GORMAN-RUPP EUROPE
gresales@gormanruppeurope.com